NTR30N2
NTR50N2

CHOOSE COMFORT AND EFFECTIVENESS

PRELIMINARY SPECIFICATIONS

TOW TRUCK, 24V, 3.0 - 5.0 TONNES

CAT®

EFFECTIVE OPERATORS AND EFFICIENT LOGISTICS

CAT® N2-GENERATION TOW TRUCKS BOOST BOTH MACHINE AND OPERATOR EFFECTIVENESS, THANKS TO MARKET-LEADING ENERGY EFFICIENCY, CONTROL AND COMFORT. THEIR SUPERIORITY IS BASED LARGELY ON CLEVER DESIGNS AND INTELLIGENT SYSTEMS DEVELOPED AND PROVEN IN THE ENERGISING NO-N2 LOW-LEVEL ORDER PICKER RANGE.

These powerful 3.0 and heavy duty 5.0 tonne capacity tow trucks feature smart technology which builds on the Cat® Responsive Drive System (RDS). Adaptive steering, intelligent curve control and automatic optimisation of traction, acceleration and braking ensure smooth, precise, safe and enjoyable driving.

For high comfort, low fatigue and maximum time efficiency, the spacious operator compartment has a low step height and offers unobstructed walk-through and on-off access. A vibration-dampening, triple-suspension floor and a comfortable backrest add further luxury.

Walk-beside operation, giving a clearer view of the trailer, is especially useful when manoeuvring to couple or uncouple. It also allows easy short movements of the truck. From a walking position, the 'flying start' function enables operators to begin acceleration before stepping aboard.

Ergonomically shaped controls, integrated into the innovative steering wheel, are easily reached by the driver without releasing his or her grip. The vibration-dampened steering unit is effortless to operate with either hand and is adjustable to the perfect height and angle.

LOWER COST OF OWNERSHIP

- Integrated single-unit motor and gear design adds reliability and delivers the best energy efficiency in the market.
- Simplified one-piece main frame, with welded steel construction, is durable and trouble-free.
- Simple and quick accessibility of systems and components for checks and servicing minimises downtime and bills.
- Inspection holes in chassis enable fast checking of gears, castor wheel and drive wheel screw.
- Easy removal of motor compartment shield on front of truck (secured by two screws) gives rapid access to main service point.
- Additional removable service hatch speeds up inspection and greasing of drive unit, as well as drive wheel changes.
- Display of service hours and battery status encourages correct maintenance (and optional user interface with colour display offers comprehensive information).
- PIN code access option prevents unauthorised use.
- Optional Li-Ion battery offering longer life, longer runtime and lower maintenance costs over traditional lead-acid batteries.

UNMATCHED PRODUCTIVITY

- Advanced steering functionality adapts rapidly to every change in operator steering behaviour and travel speed, for smooth, relaxed and safe driving.
- Unique intelligent curve control constantly adjusts steering sensitivity, cornering speed and angle limitation to maintain fluent motion, traction and balance from start to finish of turns.
- Steering control characteristics are modified when reversing, to allow for driver's sideways position and one-handed operation.
- Latest advances in traction control ensure smooth, rapid acceleration and prevent wheelspin and related wear when driving on slippery surfaces or pulling heavy loads.
- Deceleration rate and stopping distance are easy to control and predict, for perfect positioning, and are programmable using TruckTool.
- ECO and PRO driving modes can be chosen according to the operator and application, and customised settings can be applied to meet more specific requirements.
- Walk-beside operation can be controlled via the steering wheel, with angles limited for safety, to improve view of trailer, to manoeuvre when coupling and uncoupling, and to make short movements (optional side-mounted controls are available).
- 'Flying start' function allows operator to begin acceleration from walk-beside position, before stepping onto the presence-detecting floor mat, for quicker access to drive.
- Spacious and unobstructed operator compartment, with non-slip mat, low step height and no tripping hazards, ensures quick walk-through access.
- Simple battery access, connection and locking mechanisms allow exchanges in seconds, for minimal downtime.
- Automatic coupling (optional) instantly locks the truck and trailer once they are in the right position, while an additional manual release option enables decoupling without leaving the truck.
- Connector options enable use of trailers with hydraulic or electric functions for easier and faster handling.

SAFETY AND ERGONOMICS

- High-comfort, triple-suspension floor offers floating structure to dampen shocks and vibrations, sideways dampening to relax knees and ankles, and thick state-of-the-art matting to reduce microvibration.
- Angled footrest minimises strain for seated (see options) and tall operators.
- Optimised backrest shape and height give maximum walk-through access width at hip level, easy passage for operators carrying goods, and a secure leaning position during turns.
- Innovative steering wheel, with vibration damping, is effortless to operate with either hand and can be adjusted for height and angle to maximise comfort.
- Ergonomically shaped accelerator triggers and other controls, integrated into steering wheel, are easily reached by operator without releasing grip.
- Top-of-steering-wheel hand positioning choice enables comfortable and controlled reversing with reduced twisting of shoulders and wrists.
- Regenerative braking, optimised to eliminate swaying effect at full stop, combines with hill hold function and anti-lock brakes to aid smooth operation, confidence and safety in all conditions.
- Additional safety features (optional) include warning devices – driving light, strobe, blue spot or programmable alarm – as well as wide side mirrors for use when towed loads are wider than the truck.

STANDARD EQUIPMENT AND OPTIONS

	NTR30N2	NTR50N2
GENERAL		
Multifunctional steering wheel (electric 200°)	●	●
Power ON/OFF by Key switch	●	●
Hourmeter & BDI	●	●
ECO/PRO mode	●	●
High drive speed 13 km/h (without load)	●	●
Drive speed reduction in curves	●	●
Maximum drive speed adjusted according to load weight	●	●
Floor mat acting as dead man's pedal	●	●
Crane battery change	●	●
Polyurethane wheels	●	●
Suspended operator's platform	●	●
Hill hold	●	●
Automatic parking brake	●	●
POWER SOURCE		
Li-Ion battery	○	○
Lead-acid battery	○	○
TRAILER COUPLING		
Manually operated plug coupling, pin diameter 25mm	●	●
Manually operated plug coupling, pin diameter 22mm	○	○
Automatic coupling, pin diameter 25mm	○	○
Automatic coupling with ergonomic unlocking handle, pin diameter 25mm	○	○
TRAILER INTERFACE		
Electrical 4-pin Trailer socket connection of trailer	○	○
Electrical 7-pin Trailer socket connection of trailer	○	○
Auxiliary hydraulics for hydraulic coupling of trailer	○	○
ENVIRONMENT		
Cold store design, 0C° to -35C°	○	○
DRIVE CONTROLS		
Walk beside drive button in backrest, FWD/BWD	○	○
SAFETY		
Blue point safety light towards driving direction (forks trailing)	○	○
Driving light towards driving direction (forks trailing)	○	○
Rear working light	○	○
Wide rear view mirrors	○	○
Warning strobe, yellow	○	○
Drive alarm (programmable)	○	○
Fire extinguisher	○	○
WHEEL OPTIONS		
Polyurethane traction and load wheels	●	●
Power friction traction wheel	○	○
Solid rubber traction wheel	○	○
Treaded Super-Elastic rear wheels	○	○
Solid rubber rear wheels	○	○

● Standard ○ Option

STANDARD EQUIPMENT AND OPTIONS

	NTR30N2	NTR50N2
OUTLOOK		
Special RAL colour on front machinery steel cover	O	O
OTHER OPTIONS		
PIN code access with BDI display	O	O
PIN code access with colour display	O	O
Colour display without PIN code access	O	O
Accessory rail in front	O	O
Scanner holder	O	O
Equipment holder (RAM mountings)	O	O
Wrapping holder	O	O
Rear grab handle on backrest	O	O
Sideways battery change	O	O
Clipboard, A4	O	O
Front storage boxes	O	O
Storage folder on bottom of the platform	O	O
Back cushion, tiltable to seat position for back & feet rest. Adjustable in height.	O	O
Power supply, 12 V	O	O
Power supply, USB 5 V	O	O
Heavy duty front nylon strip covered bumper	O	O
Raised front guard plate	O	O
Power source: optional Li-Ion battery (standard lead-acid battery)	O	O

● Standard O Option

	Characteristics			
1.1	Manufacturer			Cat Lift Trucks
1.2	Manufacturer's model designation			**NTR30N2**
1.3	Power source			Battery
1.4	Operator type			Stand-on
1.5	Load capacity	Q	(kg)	3000
1.6	Load center distance	c	(mm)	-
1.7	Rated drawbar pull	F	(N)	600
1.8	Load wheel axle to fork face (forks lowered)	x	(mm)	-
1.9	Wheelbase	y	(mm)	1120
	Weight			
2.1	Truck weight without load, with maximum battery weight		kg	1106
2.3	Axle loadings without load & with maximum battery weight, drive/load side		kg	616/490
	Wheels, Drive Train			
3.1	Tyres: PT=Power Thane, Vul=Vulkollan, P=Polyurethane, N=Nylon, R=Rubber drive/load side			Vul/ Vul
3.2	Tyre dimensions, drive side		(mm)	ø250
3.3	Tyre dimensions, load side		(mm)	ø250
3.4	Castor wheel dimensions (diameter x width)		(mm)	-
3.5	Number of wheels, load/drive side (x=driven)			2/ 1x
3.6	Track width (center of tyres), drive side	b10	(mm)	-
3.7	Track width (center of tyres), load side	b11	(mm)	650
	Dimensions			
4.2a	Height	h1	(mm)	1173
4.8	Seat- or stand height	h7	(mm)	123
4.12	Coupling height	h10	(mm)	155**
4.19	Overall length	l1	(mm)	1450
4.21	Overall width	b1/b2	(mm)	800
4.25	Outside width over forks (minimum/maximum)	b5	(mm)	794
4.32	Ground clearance at center of wheelbase, (forks lowered)	m2	(mm)	50
4.34a	Working aisle width (Ast) with 800 x 1200 mm pallets, load lengthwise	Ast	(mm)	-
4.35	Turning radius	Wa	(mm)	1306
	Performance			
5.1	Travel speed, with/without load		km/h	9,0/ 13,0***
5.6	Maximum drawbar pull with/without load		N	
5.7	Gradeability, with/without load		%	6 / 15
5.10	Service brake			Electric
	Electric motors			
6.1	Drive motor capacity (60 min. short duty)		kW	2.6
6.4	Battery voltage/capacity at 5-hour discharge		V /Ah	24/ 465-620
6.5	Battery weight		kg	366-493
6.6	Energy consumption according to EN16796		kWh/h	??
	Miscellaneous			
8.1	Type of drive control			Stepless
10.7	Level of noise at the ear level of the driver according to EN 12 053:2001 and EN ISO 4871 in work LpAZ		dB(A)	62
10.7.1	Level of noise at the ear level of the driver according to EN 12 053:2001 and EN ISO 4871, drive/lift/idle LpAZ		dB(A)	73/62/-
10.7.2	Whole-body vibration (EN 13 059:2002)			??
10.7.3	Hand-arm vibration (EN 13 059:2002)			
10.8	Towing coupling design / DIN type, ref.			

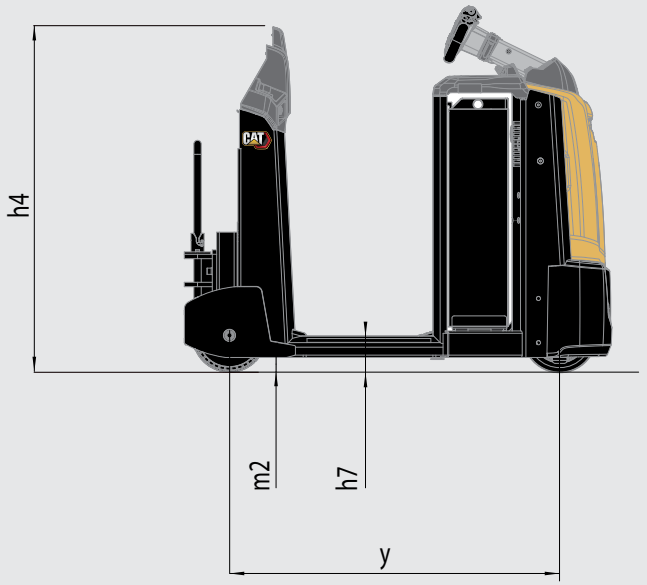

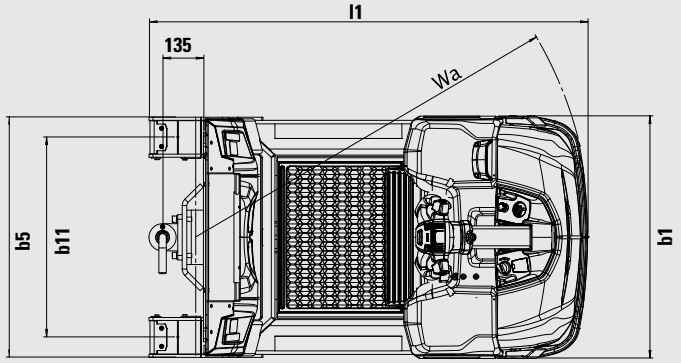

Ast = Wa-x+l6+200
Ast = Working aisle width
Wa = Turning radius

**) other coupling heights available
***) See drive speed chart

	Characteristics			
1.1	Manufacturer			Cat Lift Trucks
1.2	Manufacturer's model designation			**NTR50N2**
1.3	Power source			Battery
1.4	Operator type			Stand-on
1.5	Load capacity	Q	(kg)	5000
1.6	Load center distance	c	(mm)	-
1.7	Rated drawbar pull	F	(N)	1000
1.8	Load wheel axle to fork face (forks lowered)	x	(mm)	-
1.9	Wheelbase	y	(mm)	1120
	Weight			
2.1	Truck weight without load, with maximum battery weight		kg	1106
2.3	Axle loadings without load & with maximum battery weight, drive/load side		kg	616/490
	Wheels, Drive Train			
3.1	Tyres: PT=Power Thane, Vul=Vulkollan, P=Polyurethane, N=Nylon, R=Rubber drive/load side			Vul/ Vul
3.2	Tyre dimensions, drive side		(mm)	ø250
3.3	Tyre dimensions, load side		(mm)	ø250
3.4	Castor wheel dimensions (diameter x width)		(mm)	-
3.5	Number of wheels, load/drive side (x=driven)			2/ 1x
3.6	Track width (center of tyres), drive side	b10	(mm)	-
3.7	Track width (center of tyres), load side	b11	(mm)	650
	Dimensions			
4.2a	Height	h1	(mm)	1173
4.8	Seat- or stand height	h7	(mm)	123
4.12	Coupling height	h10	(mm)	155**
4.19	Overall length	l1	(mm)	1450
4.21	Overall width	b1/b2	(mm)	800
4.25	Outside width over forks (minimum/maximum)	b5	(mm)	794
4.32	Ground clearance at center of wheelbase, (forks lowered)	m2	(mm)	50
4.34a	Working aisle width (Ast) with 800 x 1200 mm pallets, load lengthwise	Ast	(mm)	-
4.35	Turning radius	Wa	(mm)	1306
	Performance			
5.1	Travel speed, with/without load		km/h	7,0/ 13,0***
5.6	Maximum drawbar pull with/without load		N	
5.7	Gradeability, with/without load		%	4 / 15
5.10	Service brake			Electric
	Electric motors			
6.1	Drive motor capacity (60 min. short duty)		kW	2.6
6.4	Battery voltage/capacity at 5-hour discharge		V /Ah	24/ 465-620
6.5	Battery weight		kg	366-493
6.6	Energy consumption according to EN16796		kWh/h	??
	Miscellaneous			
8.1	Type of drive control			Stepless
10.7	Level of noise at the ear level of the driver according to EN 12 053:2001 and EN ISO 4871 in work LpAZ		dB(A)	62
10.7.1	Level of noise at the ear level of the driver according to EN 12 053:2001 and EN ISO 4871, drive/lift/idle LpAZ		dB(A)	73/62/-
10.7.2	Whole-body vibration (EN 13 059:2002)			??
10.7.3	Hand-arm vibration (EN 13 059:2002)			
10.8	Towing coupling design / DIN type, ref.			

**) other coupling heights available

***) See drive speed chart

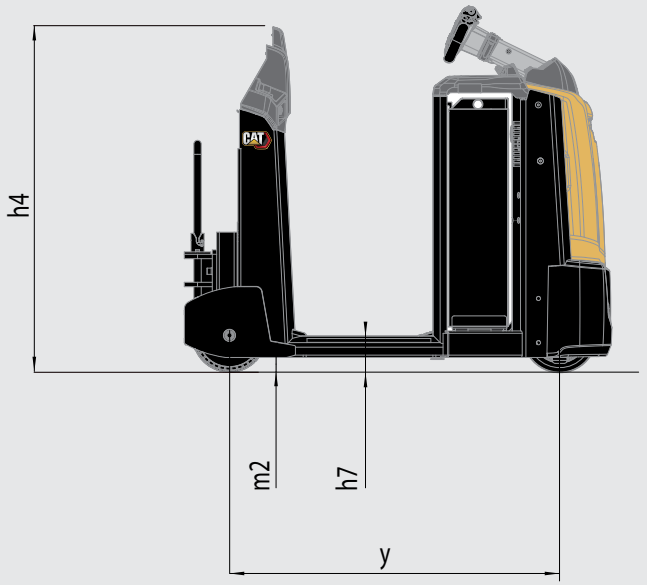

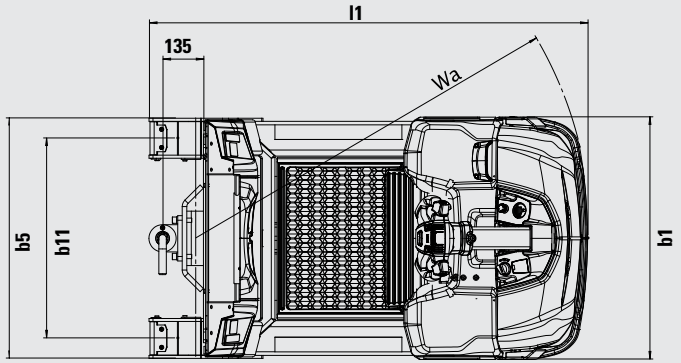

Ast = Wa-x+l6+200
Ast = Working aisle width
Wa = Turning radius

LI-ION BATTERIES

CONSIDER THE BENEFITS OF LI-ION BATTERY TECHNOLOGY

Like all components on Cat® lift trucks, batteries are carefully chosen and specified for optimum compatibility with each individual truck and its application requirements. As a leader in forklift development, we are ready to adopt new component technologies as soon as they become genuinely cost-effective.

At present, the needs of most lift trucks are still met optimally by lead-acid batteries, but in some cases lithium-ion (Li-ion) batteries now offer a realistic alternative. This is especially true in high-energy, multi-shift, 24/7 operations.

In view of the improved performance and affordability of today's Li-ion batteries, we have introduced them as an option. They will be offered on particular trucks, whenever they make economic and practical sense for you and your business.

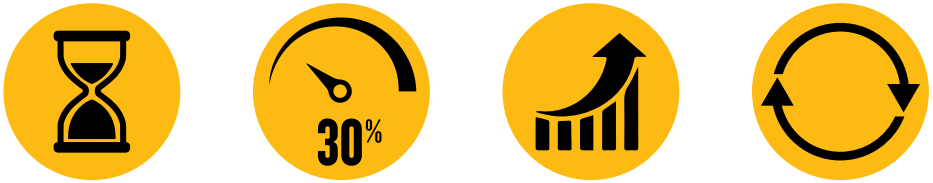

Will Li-ion work for you?

Li-ion batteries offer tremendous advantages over traditional lead-acid batteries. The big question is whether those benefits are sufficient – in your situation – to justify the large difference in purchase price. To answer this, you must consider their total cost of ownership (TCO). The key factors are summarised below.

Li-ion cost savings compared to lead-acid

These include savings on energy, equipment, labour and downtime.

- Longer life – 3 to 4 times lead-acid lifespan – reduces overall battery investment
- Higher efficiency – energy losses during charging and discharging are around 30% lower, so electricity consumption is reduced
- Longer runtime – thanks to higher energy capacity, lower losses and more efficient recovery of current from regenerative braking
- Consistently high performance – with a more constant voltage curve – maintains greater truck productivity, even toward the end of a shift
- Faster charging and opportunity charging – full charge within 1 to 2 hours – enables top-ups during short breaks, without damaging the battery or shortening its lifespan
- No battery changing – fast opportunity charges enable continuous operation with just one battery and minimise the need to buy, store and maintain spares
- No maintenance – the battery stays on board the truck for charging and there is no need for top-ups or electrolyte checks
- No gas – avoids the space, equipment and running costs of a battery room and ventilation system
- Inbuilt protection – intelligent battery management system (BMS) automatically prevents excessive discharge, charge, voltage and temperature, as well as virtually eliminating application errors

LI-ION BATTERIES

CONSIDER THE BENEFITS OF LI-ION BATTERY TECHNOLOGY

LiION BATTERY TECHNOLOGY

Li-ion extra costs compared to lead-acid

Li-ion battery purchase prices are higher – although they are coming down as production volumes increase. You may also need to invest in extra charging points and electrical infrastructure to support them.

Further advantages of Li-ion compared to lead-acid

Money should not be your only consideration. Li-ion batteries also have important safety and environmental benefits.

- Greater safety – no explosive gas, acid spills or regular battery lifting
- Smaller carbon footprint – better efficiency means less energy consumption, while longer life lowers the requirement for manufacture of additional batteries

Cat lift trucks with Li-ion

The necessary LIBAT option can be built into new trucks or retrofitted to your existing fleet using a fast and easy conversion kit. LIBAT ensures perfect integration of the Li-ion battery and lift truck. Along with the necessary cabling and connections, it includes a battery lock.

For extra peace of mind, Li-ion batteries come with the option of a service contract, full warranty and feedback on battery status. Data collected by the battery's inbuilt battery management system (BMS) is uploaded and analysed to help the dealer advise you on its condition and usage. The report may, for example, indicate a need for changes in your practices to improve efficiency and battery life.

Batteries and chargers with different capacities are available. Your dealer will identify the best combination for your needs.

Battery capacity, Ah	208	312
Charger capacity, Ah, 1 hour	100	300

info@catlifttruck.com | www.catlifttruck.com

WESC1970(07/19) ©2019, MCFE. All Rights Reserved. CAT, CATERPILLAR, LET'S DO THE WORK, their respective logos, "Caterpillar Yellow", the "Power Edge" and Cat "Modern Hex" trade dress as well as corporate and product identity used herein, are trademarks of Caterpillar and may not be used without permission.

NOTE: Performance specifications may vary depending on standard manufacturing tolerances, vehicle condition, types of tyres, floor or surface conditions, applications, or operating environment. Trucks may be shown with non-standard options. Specific performance requirements and locally available configurations should be discussed with your Cat lift trucks Dealer. Cat Lift Trucks follows a policy of continual product improvement. For this reason, some materials, options and specifications could change without notice.

DOWNLOAD BROCHURE

WATCH VIDEOS

DOWNLOAD OUR APP

CAT®